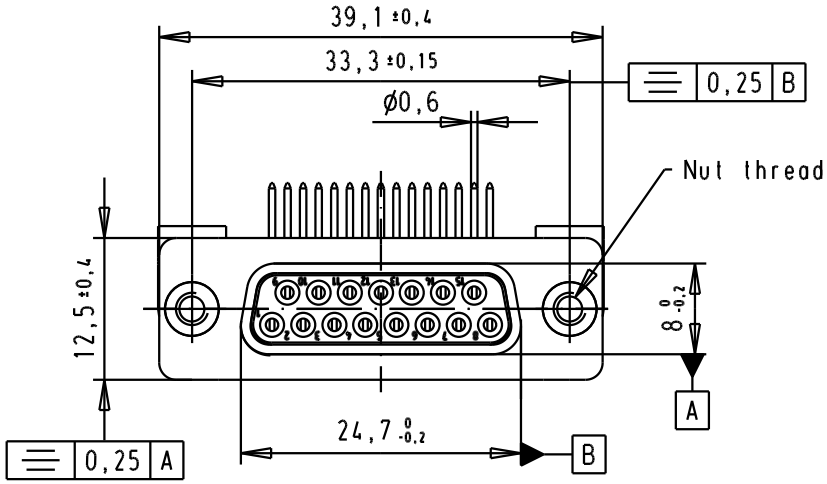

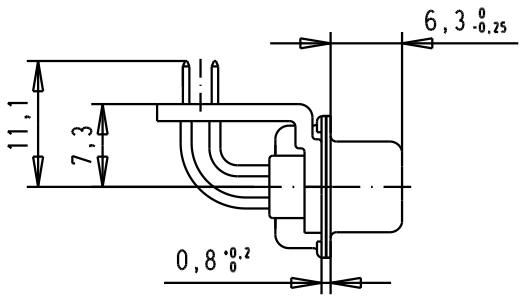

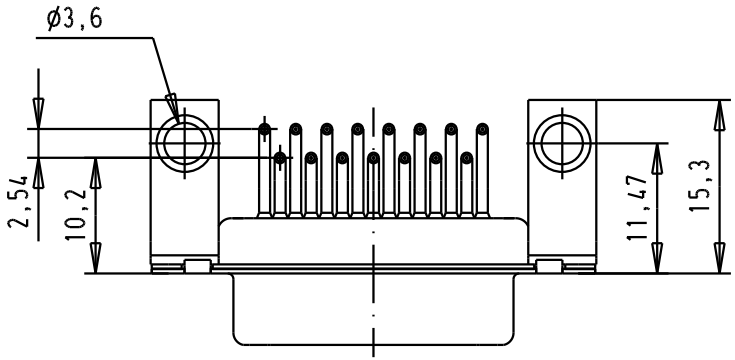

PCB Layout, Component side

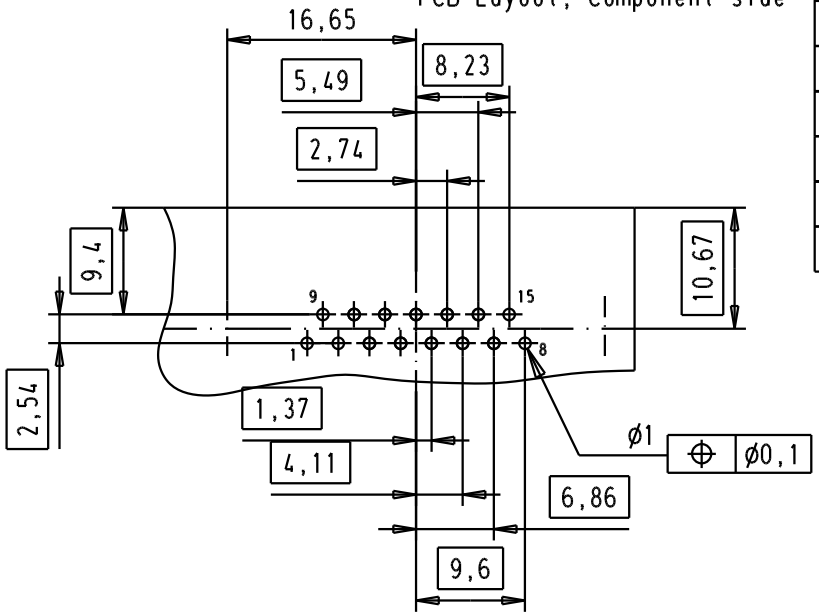

SPECIFICATION

Mating Cycles	500
Filter type	C
Capacitance	1000pf ±20%
Working Voltage	100V
Current Rating	7,5Amp
Insulation Resistance	>1GΩ

Minimum Insertion Loss

FREQUENCY (MHz)	ATTENUATION dB
5	1dB
10	3dB
50	12dB
100	20dB
500	34dB
1000	30dB

09642147237	M3
09642147236	4-40UNC 2B
Part number	Nut thread

31576	01/12/03	AF
31493	12-05-03	PP
31487	17-04-03	PP
Mod.	Dat.	Name

	Dat.	Name
Detail.	17-04-03	PP
Insp.		
Stand.		

All Dim. in mm
Orig. Size DIN A 4

HARTING EURL
F-95972 Paris

D-Sub, female, angled, 15 Poles, with turned solder pin, metal bracket with nut and hole

Ma?Mstab/ Scale: 1.5:1

TB 0964214723x

Sub.

Blatt/ Page 3/4