NOTES:

1. MATERIALS AND FINISHES:
   BODY & CONTACT - BRASS, GOLD PLATING
   INSULATOR - PTFE, NATURAL

2. ELECTRICAL:
   A. IMPEDANCE: 50 OHM
   B. FREQUENCY RANGE: DC - 6 GHz
   C. RETURN LOSS (VSWR): -30dB (1.07) DC - 3 GHz
   -17dB (1.33) 3 - 6 GHz
   D. CONTACT RESISTANCE: CENTER CONTACT 5 mΩ MAX.
   OUTER CONTACT 5 mΩ MAX.
   E. INSERTION LOSS: 0.1 dB MAX @ DC - 3 GHz
   F. INSULATION RESISTANCE: 5000 MΩ MIN.
   G. DIELECTRIC WITHSTANDING VOLTAGE: 1000 VRMS, MIN.
   H. POWER HANDLING: 40 W @ 2.6 GHz AT 95°C
   120 W @ 2.5 GHz AT 95°C

3. MECHANICAL:
   A. DURABILITY: 50 CYCLES MIN.
   B. TEMPERATURE RANGE: -45°C TO +125°C

4. PACKAGING:
   A. PACKAGE IN 50 PIECE TRAYS
   B. MARK TRAYS: "AMPHENOL RF, 920-507J-52P, DATE CODE"

THIRD ANGLE PROJ.

REVISIONS				
REV	DESCRIPTION	DATE	ECO	APPR
A	RELEASE TO MFG.	24-May-18	8168	BMG

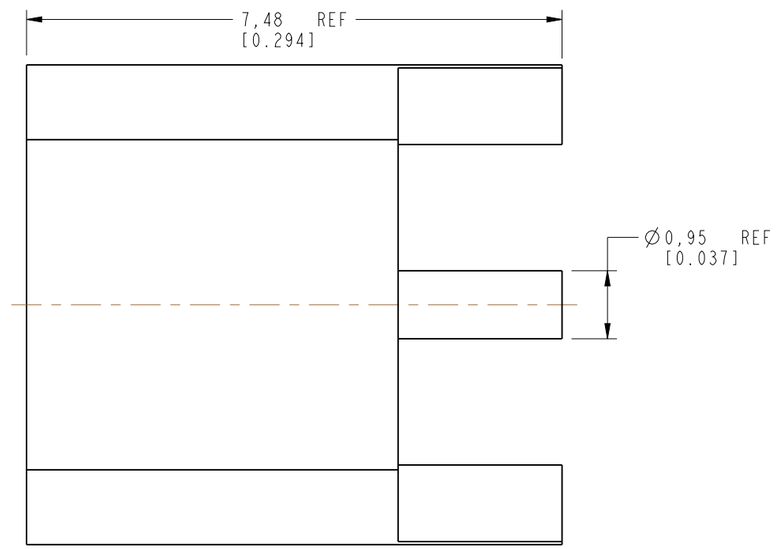

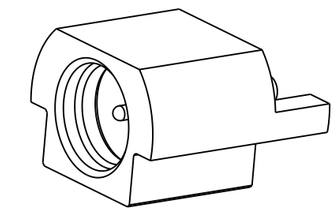

SCALE 5.000

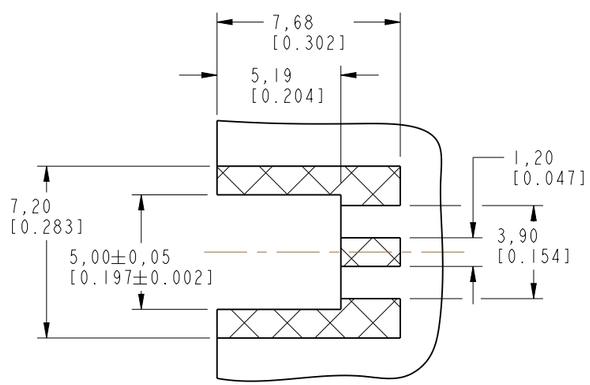

RECOMMENDED PCB LAYOUT

SOLDER FOOTPRINT ONLY, PERFORMANCE WILL VARY BASED ON BOARD LAYOUT

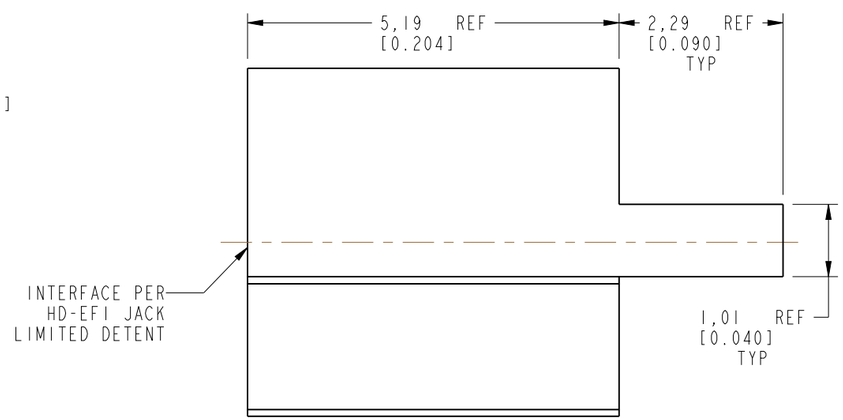

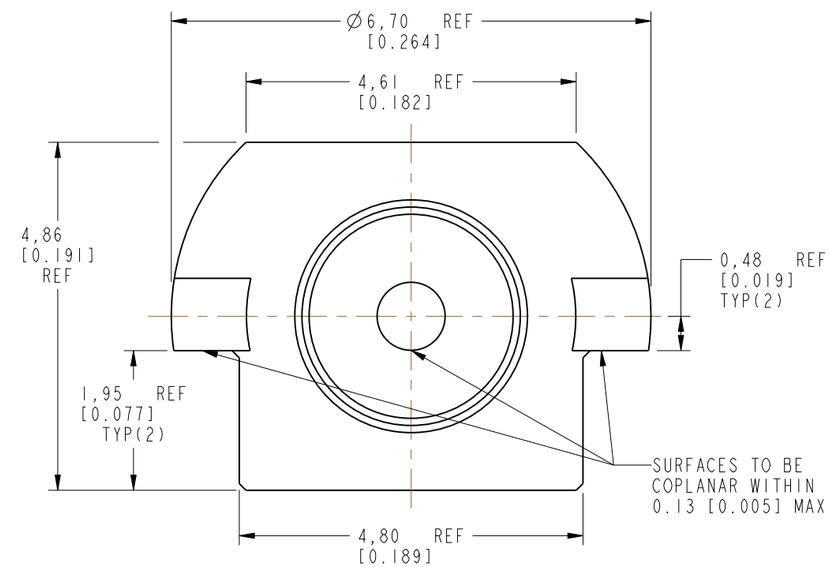

CUSTOMER OUTLINE DRAWING

ALL OTHER SHEETS ARE FOR INTERNAL USE ONLY

UNLESS OTHERWISE SPECIFIED, DIMENSIONS ARE IN METRIC AND TOLERANCES ARE:

<0.5mm	0.5 - 6mm	6 - 30mm	30 - 120mm	ANGLES
± 0.05mm	±0.1mm	±0.2mm	± 0.3mm	±1°

NOTICE - These drawings, specifications, or other data (1) are, and remain the property of Amphenol corp. (2) must be returned upon request; and (3) are confidential and not to be disclosed to any person other than those to whom they are given by Amphenol Corp. the furnishing of these drawings, specifications, or other data by Amphenol Corp., or to any other person to anyone for any purpose is not to be regarded by implication or otherwise in any manner licensing, granting rights to permitting such holder or any other person to manufacture, use or sell any product, process or design, patented or otherwise, that may in any way be related to or disclosed by said drawings, specifications, or other data.

MATERIAL	DRAWN	DATE
SEE NOTES	CLEMENT	03-May-17
REFERENCE	ENGINEER	DATE
EAR# 7563	B.GREENBAUM	03-May-17
REF: 615X-3351-X00	APPROVED	DATE
CONFIGURATION LEVEL: In Work	K.CAPOZZI	24-May-18
FINISH	CAD FILE	

TITLE
HD-EFI STR JACK
LIMITED DETENT
EDGE MOUNT

SCALE: 12.0:1.0 | SHEET 2 OF 2

DWG SIZE	REV
B	A

Amphenol RF
www.amphenolrf.com

DRAWING NO.	920-507J-52P
ITEM NO.	920-507J-52P
PART NO.	920-507J-52P