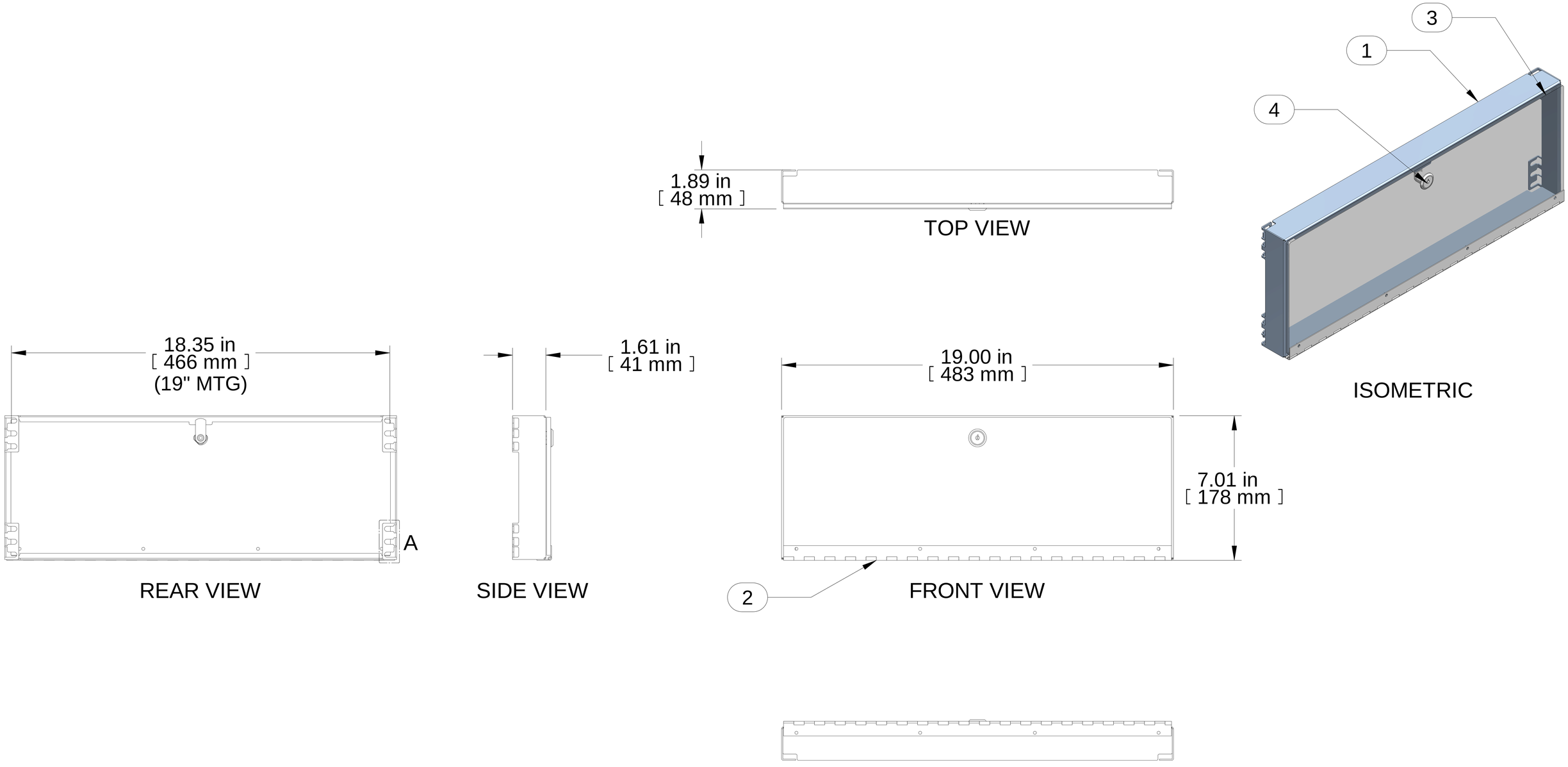


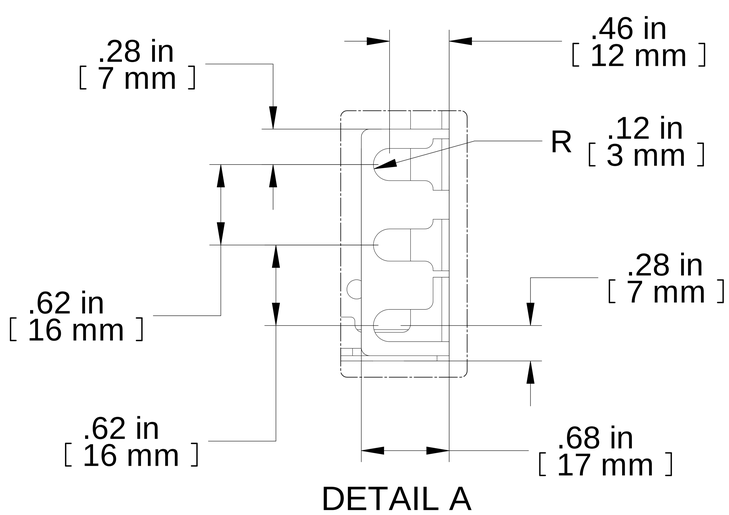


| Item Number | Title | Quantity |
|---|---|---|
| 1 | SECURITY COVER FRAME | 1 |
| 2 | HINGE ASSEMBLY | 1 |
| 3 | SMOKED PLEXI GLASS (6MM) | 1 |
| 4 | LOCK KEY-LOCK W/NUT 7.5MM | 1 |

**PART NUMBERS**

RMSC1904BK1 PAINTED BLACK TEXTURED

**NOTES**

Does not include mounting hardware.
See Hammond Website for More Information

**Français**

Pour tous les détails sur nos produits,
svp veuillez consulter notre site www.hammondmfg.com

Data subject to change without notice. Isometric drawing not to scale.
Les données sont sujettes à changement sans préavis.

HAMMOND MANUFACTURING®

www.hammondmfg.com

**PART NO.** **RMSC1904**