Copyright FCI.

FCIconnect.com

PRODUCT NUMBER	PITCH
VCxx01xA00J0G	7.62 mm

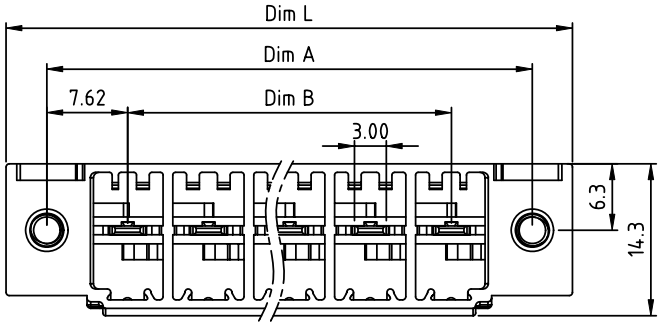

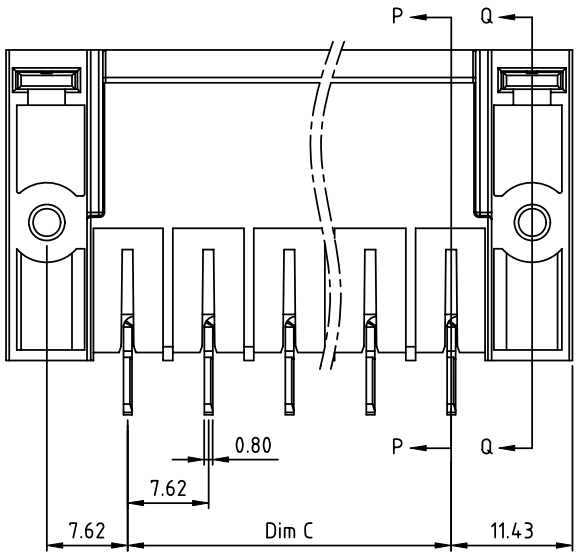

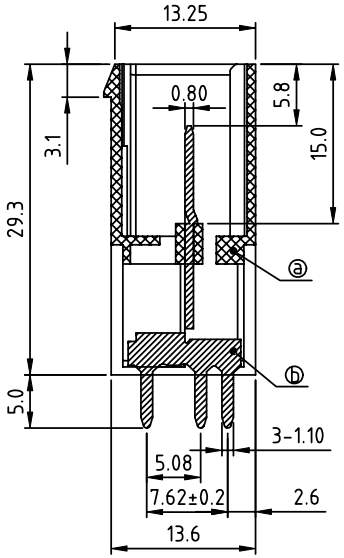

SECTION P-P

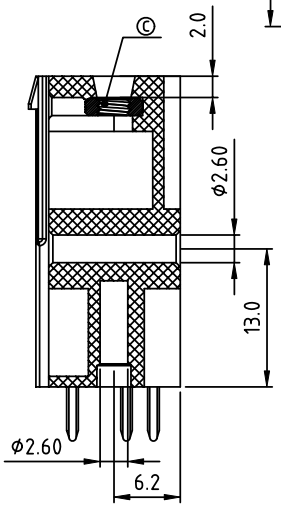

SECTION Q-Q

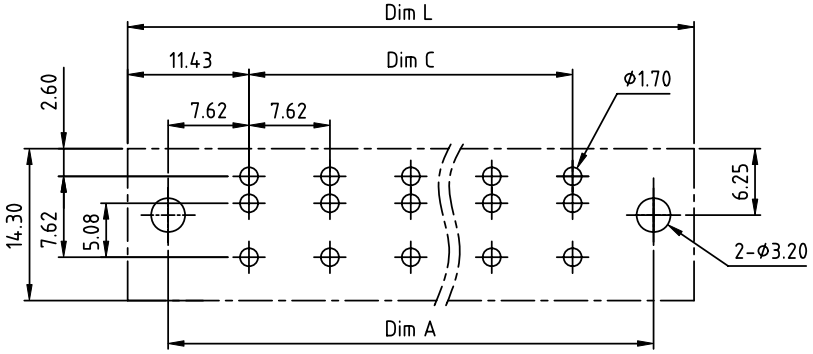

RECOMMENTED P.C.B LAYOUT
TOP VIEW

Material:
- Item ⓐ Terminal(housing): Thermoplastic (UL94V-0)
- Item ⓑ Pin: Copper,Tin plated
- Item ⓒ With flange nut : Steel znic plating M3

Electrical: cULus
- Voltage rating:300V
- Current rating:41A
- Withstanding Voltage:1.6 KV
- Operating temperature:-40°C to +115°C
- Soldering temperature:260°C±5°C/5 Sec
- Safeyt Approval:

DIMENSION

Dim L	(N-1)×7.62+22.86
Dim A	(N-1)×7.62+15.24
Dim B	(N-1)×7.62
Dim C	(N-1)×7.62

N=Number of poles

Poles	Tolerance
2p-5p	±0.20
6p-12p	±0.30
13p-16p	±0.40

PART NO.: V C xx 0 1 x A 00J0 G

Solid block
No. of poles
02 2 poles
03 3 poles
... ...
16 16 poles

Color
0 Black (RAL9005)
2 Red (RAL3001/D)
3 Orange(RAL2011/P)
4 Yellow(RAL1018/A)
5 Green(RAL6018/T)
6 Blue (RAL5015/A)
8 Grey(RAL7035/D)
9 White(RAL1102)
C Green(RAL6018/U)

RoHS compliant
(lead<4%)
In copper Alloy

mat'l. code				surface ASME Y14.5	tolerance ASME Y14.5	projection	product family TERMINAL BLOCK
ltr	ecn no	dr	date	tolerances unless otherwise specified			title
				angles	linear X.±0.5 / X.X±0.3 / X.XX±0.1	MM	TERMINAL BLOCK PLUGGABLE SOCKET,WITH FLANGE VERTICAL,THREE TAILS TYPE
				X°±1°		scale	
				dr	EVIN ZHONG 050714	FCI	dwg no VCxx01xA00J0G — sheet 1 of 1 — size A4
				engr	EVIN ZHONG 050714		
				chr	HANKE FENG 050714		
				appd	SHI JUN 050714		type CUSTOMER Drawing
sheet index	revision	A					
	sheet	1					