THIS DRAWING IS UNPUBLISHED. RELEASED FOR PUBLICATION N/A , N/A .
© COPYRIGHT N/A BY TYCO ELECTRONICS CORPORATION. ALL RIGHTS RESERVED.

LOC	DIST
DF	XO

REVISIONS

F	LTR	DESCRIPTION	DATE	DWN	APVD
	B	REV PER 0423-02	8-02	JMK	JL

COMPONENT	MATERIAL	FINISH
HOUSING – COUPLING NUT	STAINLESS STEEL PER ASTM-A-484 OR ASTM-A-582 TYPE 303	PASSIVATED PER ASTM-A-380 – –
– DIELECTRIC –	PTFE FLUORCARBON PER ASTM-D-1457 –	– – –
– CENTER CONTACT –	BRASS PER ASTM-B-16 HALF HARD –	GOLD PLATED PER ASTM-B-488 –
CLAMP NUT – INNER SLEEVE	STAINLESS STEEL PER ASTM-A-484 OR ASTM-A-582 TYPE 303	PASSIVATED PER ASTM-A-380 –
– GASKET –	SILICONE RUBBER PER ZZ-R-765 –	– – –
– FERRULE –	COPPER OR BRASS ALLOY, ROCKWELL F65 MAX	GOLD PLATED PER ASTM-B-488 –
– RETAINING RING –	BERYLLIUM COPPER PER ASTM-B-194 ALLOY C17200, CONDITION H	– – –
– REAR DIELECTRIC –	NYLON OR ZYTEL#101 PER MIL-M-20693A –	– – –

ENVIRONMENTAL
TEMPERATURE RATING: -65°C TO +165°C
VIBRATION: MIL-STD-202, METHOD 204, CONDITION D
SHOCK: MIL-STD-202, METHOD 213, CONDITION 1
MOISTURE RESISTANCE: MIL-STD-202, METHOD 106
CORROSION: MIL-STD-202, METHOD 101, CONDITION B. 5% SALT SPRAY
THERMAL SHOCK: MIL-STD-202, METHOD 107, CONDITION B EXCEPT HIGH TEMP 85°C

MECHANICAL		
INTERFACE DIMENSIONS: MIL-STD-348A FIG. 310.1		
RECOMMENDED MATING TORQUE: 7-10 IN-LBS		
FORCE TO ENGAGE & DISENGAGE (IN-LBS MAX:) 2.0		
WEIGHT (GRAMS): TBD		
MATING CHARACTERISTICS:	INSERTION (MAX LBS)	N/A
	WITHDRAWAL (MIN OZ):	N/A
CABLE RETENTION:	AXIAL FORCE (LBS)	10 MIN
	TORQUE (IN-OZ):	N/A
CENTER CONTACT CAPTIVATION:	AXIAL (LBS):	6.0
	RADIAL (IN-OZ):	N/A

ELECTRICAL		
NORMAL IMPEDANCE (OHMS): 50		
FREQUENCE RANGE (GHz): DC TO 12.4		
VOLT RATING @ SEA LEVEL (VRMS MAX): 170		
VSWR: 1.20+.025f(GHz)		
INSERTION LOSS: (dB MAX): .06 $\sqrt{f(GHz)}$		
RF LEAKAGE (dB MIN): -60 @ 2-3 GHz		
CORONA 70,000 FT (VRMS MIN): 125		
DIELECTRIC WITHSTANDING VOLTAGE (VRMS MIN) AT SEA LEVEL: 500		
I.R. (MEGOHMS MIN): 5,000		
RF HIGH POTENTIAL AT SEA LEVEL (VRMS MIN @ 5 MHz): 335		
CONTACT RESISTANCE (MILLIOHMS MAX):		
	CENTER CONTACT:	3.0
	OUTER CONTACT:	2.0
	CABLE TO HOUSING:	0.5

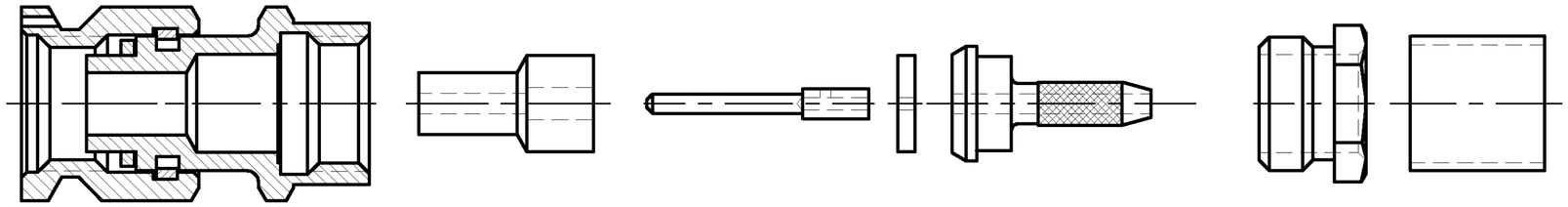

AS SHIPPED TO CUSTOMER

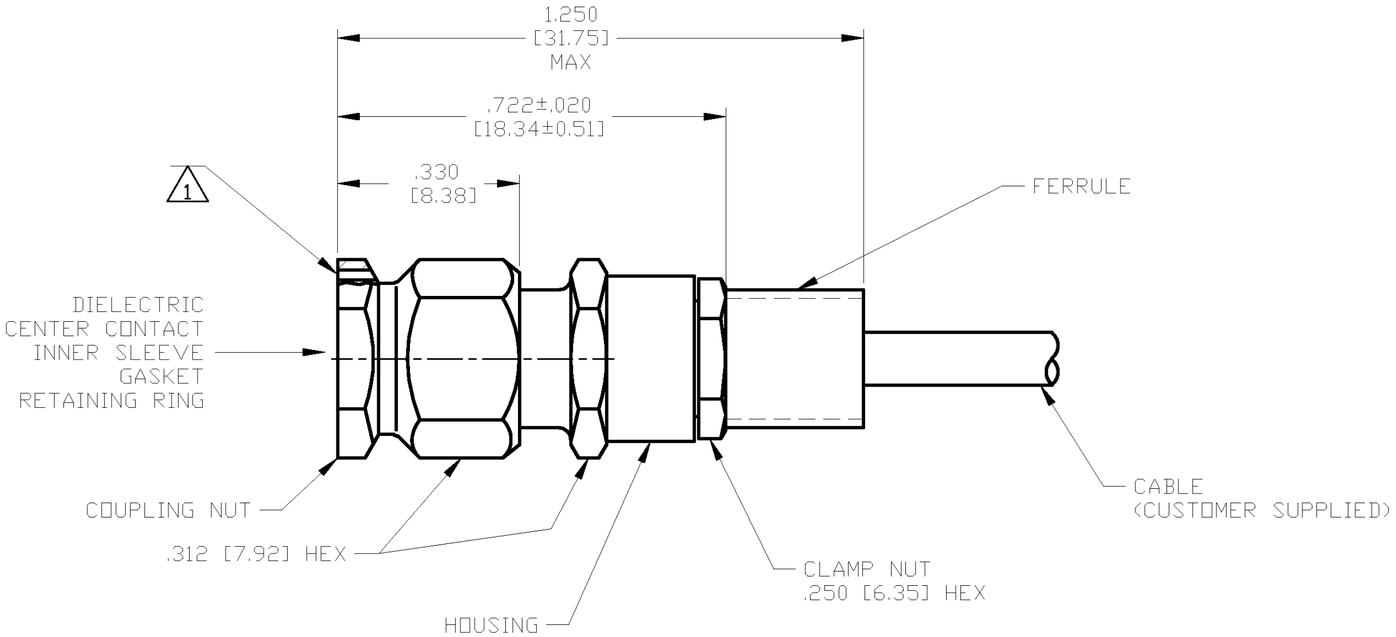

ASSEMBLED VIEW

1051780

1 ø.018 [0.46] LOCKWIRE HOLE, 3 PLACES EQUALLY SPACED.

DESIGNED TO USE RG-178/U OR EQUIVALENT	
CABLE ENTRY DIAMETER MIN	
HOUSING:	N/A
CONTACT:	.021 [0.53]
CLAMP NUT:	.179 [4.55]
SLEEVE:	.101 [2.56]
–	–

THIS DRAWING IS A CONTROLLED DOCUMENT.

DIMENSIONS: INCHES [mm]

TOLERANCES UNLESS OTHERWISE SPECIFIED:
0 PLC ± –
1 PLC ± –
2 PLC ± –
3 PLC ± .005 [0.13]
4 PLC ± –
ANGLES ± –

MATERIAL: SEE TABLE
FINISH: SEE TABLE

DWN	J. KAISER	8-27-02
CHK	J.LIPPERT	10-9-02
APVD	J.LIPPERT	10-9-02
PRODUCT SPEC	–	
APPLICATION SPEC	408-4933	
WEIGHT	TBD	

tyco Electronics — Tyco Electronics Corporation, Harrisburg, PA 17105

NAME: SMA STRAIGHT CABLE PLUG CRIMP ATTACHMENT (M39012/55-3025) CAT C

SIZE	CAGE CODE	DRAWING NO	RESTRICTED TO
A2	00779	C-1051780	–

CUSTOMER DRAWING | SCALE 5:1 | SHEET 1 OF 1 | REV B

1051780-1
PART NO.

MA/COM # 2031-8025-92

AMP 1471-9 REV 31MAR2000

J:\DEPT1733\U.DIES\john lippert\1051780_1_c.dwg