DESCRIPTION

Demonstration circuit DC1366A features the LTC®4266CUHF, a quad network power controller with I²C™ interface, designed for use in IEEE 802.3at™-compliant Power Sourcing Equipment (PSE). Integrated into a tiny 5mm×7mm 38-pin QFN package are four independent ports controlling external N-channel power MOSFETs. Each port features:

- Reliable 4-point PD detection
- Selectable 1 or 2-event classification
- Inrush current limiting
- Extremely fast short-circuit protection with programmable foldback current threshold
- Programmable cutoff current threshold for class power enforcement
- Voltage and current readback
- DC disconnect sensing

The DC1366A board is configured like a midspan PSE with two RJ45 connectors for each port such that gigabit Ethernet data can pass through the board at full line rates while dc power is injected by the LTC4266 on the PD side of the board.

Often one of the most challenging aspects of designing a PSE system is the power management software; Linear Technology makes the job easier with the fully-featured LTC4266 register set and an advanced GUI software application. The GUI allows the user full and easy access to the LTC4266 register set with detailed contextual help info. The GUI also includes a host computer emulator to demonstrate basic power management techniques: the user selects various system parameters such as PSE type (endspan or midspan), 1 or 2-event classification, total system power budget, and fault handling rules; then with the click of a button the host computer emulator takes control of the system, managing the power budget as PDs are connected and disconnected, and logging all events.

The DC1366A demo boards, CAD files, and GUI software are available only under a non-disclosure agreement (NDA). **Contact your local Linear Technology sales person or field applications engineer**.

LT, LTC, and QuickEval are trademarks of Linear Technology Corporation; I²C is a trademark of Phillips Electronics N.V.; all other trademarks are the property of their respective owners.

QUICK START PROCEDURE

Figure 1 shows the basic setup. The LTC4266 requires two power supply rails: V_{DD} (nominally 3.3V) and V_{EE} (nominally -54V). The V_{DD} supply can be provided by the DC590B board or an external bench supply.

When running the GUI application on a Windows computer, the DC590B board from Linear Tech is used to interface a USB port on the PC to the I²C bus on the DC1366A board. The DC590B also provides optoisolation of the I²C bus, and an isolated 3.3V supply to run the LTC4266 chip; the user need only provide the V_{EE} supply.

Alternatively, the user can omit the DC590B and connect some other I²C master device to the DC1366A board. If the DC590B is omitted then a bench power supply must provide V_{DD}.

For applications where power management is not required, the LTC4266 features an AUTO mode allowing it to operate completely autonomously.

Choose one of the setup procedures shown on the next page, depending on whether or not the GUI application software is required.

Setup Procedure to Run the GUI Software

1. Install the GUI software on the PC according to the instructions in the README.txt file included with the GUI software.
2. On the DC590B board:
   a. Set both sides (ISO and SW) of JP5 to ON.
   b. Set JP6 to 5V. (This will be regulated down to 3.3V on the DC1366A board.)
3. Connect the DC590B board to the PC with a standard USB A-B cable.
   a. Verify the computer recognized the USB device. (The first time the DC590B board is connected the Hardware Wizard may ask for help to locate the driver. Direct it to the location specified in the README.txt that came with the GUI software.)
   b. Verify the ISO PWR LED on the DC590B board is lit.
4. On the DC1366A board:
   a. Set JP5 to the USB VDD position.
   b. Set JP3 to the TIE position.
   c. Set JP4 (AUTO) to the HI position.
   d. If midspan operation is desired set JP2 to HI, for endspan set to LO.
5. Connect the DC590B board to the DC1366A board with the 14-conductor ribbon cable supplied with the DC590B board. Verify the VDD LED on the DC1366A board is lit.
6. Before connecting the main power supply to the DC1366A board verify the voltage is between 51V and 57V, **and that the main supply is turned off**.
7. Connect the main power supply to the DC1366A board with two banana patch cords as shown in Figure 1. **Verify the polarity is correct before turning on the power; positive goes to GND and negative to VEE.**
8. Turn on the main power supply and verify the VEE LED on the DC1366A board is lit.
9. Connect PDs to any of the ports on the DC1366A board and verify they turn on.
10. Launch the GUI application. Refer to the GUI users' manual for instructions.

Setup Procedure without the GUI Software

1. On the DC1366A board:
   a. Set JP5 to EXT VDD.
   b. Set JP3 to the TIE position.
   c. Set JP4 (AUTO) to the HI position.
   d. If midspan operation is desired set JP2 to HI, for endspan set to LO.
2. Connect a 3.3V power supply to the TP16 and TP30 test points as shown in Figure 1. Turn on the 3.3V supply and verify the VDD LED on the DC1366A board is lit.
3. Before connecting the main power supply to the DC1366A board verify the voltage is between 51V and 57V, **and that the main supply is turned off**.
4. Connect the main power supply to the DC1366A board with two banana patch cords as shown in Figure 1. **Verify the polarity is correct before turning on the power; positive goes to GND and negative to VEE.**
5. Turn on the main power supply and verify the VEE LED on the DC1366A board is lit.
6. Connect PDs to any of the ports on the ICM and verify they turn on.

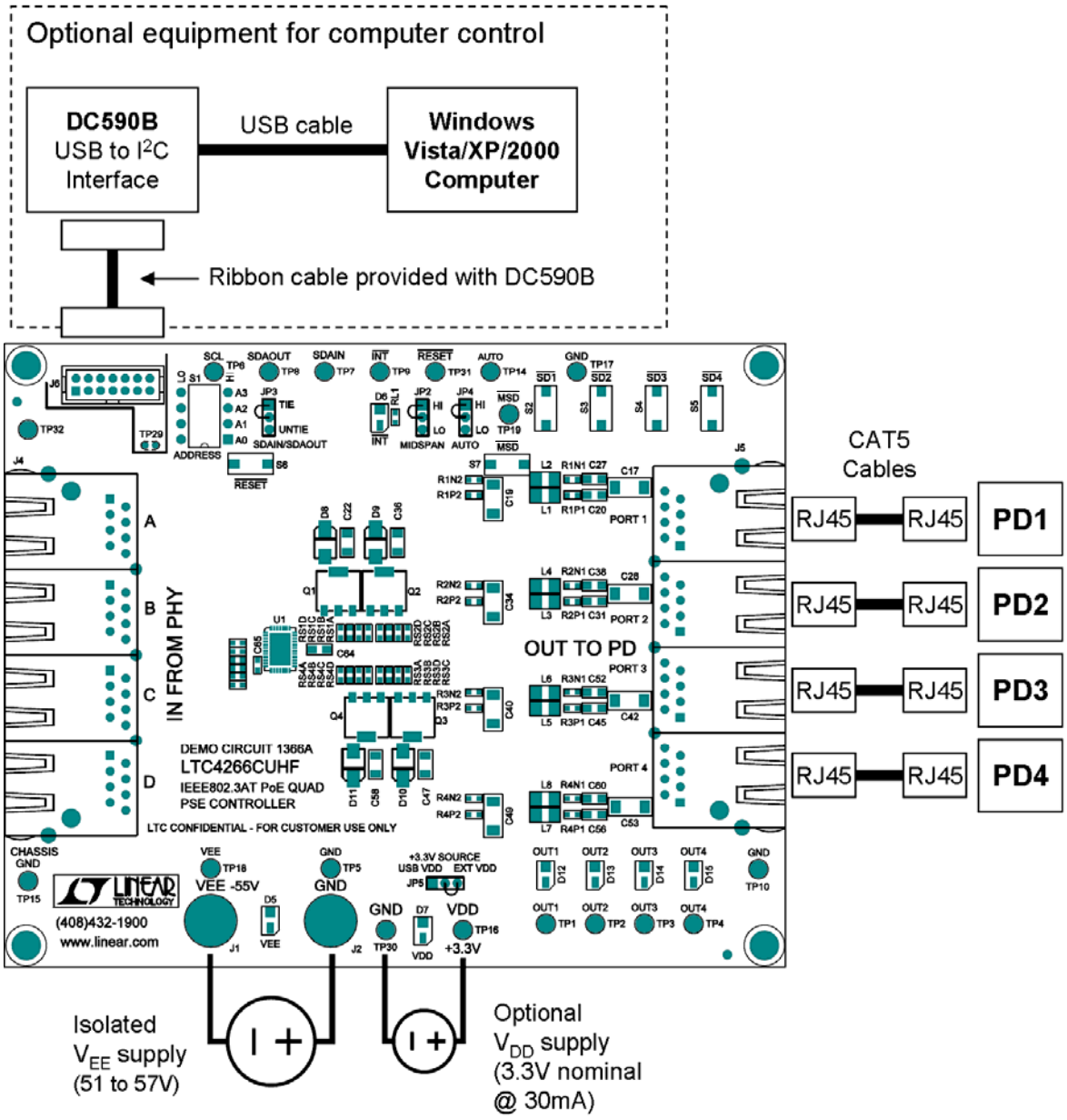

Figure 1. DC1366A Board Setup.

OPERATION

Introduction

The DC1366A demonstrates the features and capabilities of the LTC4266, a quad controller for IEEE802.3at Power Sourcing Equipment (PSE). The DC1366A provides a quick and simple, fully compliant PSE solution requiring only a V_{EE} supply when used in conjunction with the DC590B USB-to-I^{2}C interface board.

Supply Voltages

The IEEE802.3at standard requires the output voltage of a Type 2 PSE to be in the range of 51V to 57V. (The positive side is GND and the negative side is V_{EE}.) Obviously the V_{EE} supply voltage should be in this range for the sake of compliance; however, the LTC4266 is capable of operating with V_{EE} down to 30V, the max undervoltage lockout (UVLO) threshold.

Make sure to choose a V_{EE} supply with enough power to sustain all four ports at maximum load; if the total load is too great for the power supply its voltage may drop below the UVLO threshold, resetting the LTC4266 and shutting off all the ports. The worst case is when all four PDs are class 4: each class 4 PD may draw up to 600mA, totaling 2.4A. Therefore a V_{EE} supply rated for at least 2.6A is recommended.

The V_{DD} supply should nominally be 3.3V but the LTC4266 is capable of operating over the range of 3.0V to 4.3V. (The UVLO threshold for the V_{DD} supply is typically 2.2V.) The LTC4266 chip typically draws only 1.1mA from the V_{DD} supply; however, LEDs and other components on the DC1366A board also draw current from V_{DD}, so the total load is typically 9mA to 26mA @ 3.3V depending on which LEDs are lit.

Modes of Operation

The LTC4266 has four modes of operation:

- **Shutdown**: Power is off, detection and classification cycles are suspended.
- **Manual**: The port does not advance automatically from detection to classification, to power on. It waits for instructions from a host controller via the I^{2}C interface.
- **Semiauto**: The port automatically advances to classification after detecting a PD, but does not turn on power to the PD until told to do so by from a host controller via the I^{2}C interface.
- **Auto**: The port does everything autonomously.

The mode of each port can be set independently of the others after power up via I^{2}C commands.

The AUTO Pin

The AUTO pin determines several aspects of the LTC4266 initial behavior. AUTO is sensed by the LTC4266 at power up and after a reset.

If the AUTO pin is high then:

- All ports come up in AUTO mode. Any valid PD will be turned on without software intervention.
- The current-sense resistors are assumed to be 0.25Ω (which they are on the DC1366A).
- High power is enabled. After the LTC4266 classifies a PD it applies power and automatically sets I_{CUT} and I_{LIM} appropriately for the class. With high-power enabled a class 4 PD will be able to draw >600mA without being cut off.

If the AUTO pin is low then:

- All ports come up in shutdown mode. The software must take action in order to power up any PDs.
- The current-sense resistors are assumed to be 0.50Ω; the software must change this to 0.25Ω for correct operation of the DC1366A. (This feature allows the LTC4266 to be a drop-in replacement for the older LTC4259 with no software changes.)
- High power is disabled. If the software were to simply change the operating mode to AUTO, a class 4 PD would be treated as class 0, i.e. limited to 15.4W in accordance with the original 802.3af standard.

Endspan vs. Midspan

The LTC4266 can be configured either for endspan or midspan operation without software intervention by setting the MID pin high or low respectively. (You must reset the LTC4266 or cycle the power for the MID pin to be sensed.) The only difference in the behavior of the LTC4266 is that the detection back-off timer is enabled when midspan operation is selected.

Each port can be configured individually as either endspan or midspan via I^2C commands.

The DC1366A board is wired for Alternative-A, MDI-X (power is injected on the data pairs of the CAT5/6e cable; positive on pins 3 and 6 of the RJ45 connector, and negative on pins 1 and 2). The original 802.3af standard required all midspans to use Alternative-B, but 802.3at now allows midspans to use Alternative-A.

Disconnect Sensing

The LTC4266 employs dc disconnect sensing only. For the sake of software backward compatibility with the older LTC4259, the LTC4266 includes register bits for enabling ac disconnect sensing, but these bits simply enable the dc disconnect sensing.

Pushbutton Switches

The DC1366A board includes several pushbutton switches to facilitate experimentation with the LTC4266.

- The $\overline{\text{RESET}}$ button (S6) resets all ports just as if the power supplies were cycled.
- The Masked Shut-Down ($\overline{\text{MSD}}$) button (S7) will turn off any ports that have their corresponding mask bit set in the MSD register.
- Each port has an individual shut down switch (S2 through S5 for ports 1 through 4 respectively).

Masked Shut Down

The MSD register can be used to pre-assign low-priority to selected ports so they can be shut down quickly when needed.

A PSE system design can utilize the MSD feature in various ways. For example, a PSE system may include a circuit that monitors the V_{EE} supply; if it becomes overloaded and the voltage begins to sag, the system can dump low-priority loads by asserting the $\overline{\text{MSD}}$ pin. Shedding excess load quickly may allow the V_{EE} voltage to recover before it reaches the UVLO threshold, thus avoiding shutting down higher-priority loads.

I^2C Addressing

The 7-bit I^2C address of the LTC4266 is $010A_3A_2A_1A_0b$, where A_3 through A_0 are determined by pins AD3 through AD0 respectively. On the DC1366A board these pins are controlled by the quad DIP switch, S1. The LTC4266 has internal

pull-up resistors on these pins, so with all four switches of S1 open the address will be 0101111b.

All LTC4266 chips also respond to the global address 0110000b regardless of the state of their AD3-AD0 pins.

I²C Bus Lines

The LTC4266 has separate pins for SDAIN and SDAOUT to facilitate the use of optocouplers. The DC1366A provides test points for both SDAIN and SDAOUT to make it easy to connect to any type of breadboard or development tools the user desires.

However, the DC590B uses a single bidirectional SDA line. Therefore the DC1366A board includes a jumper (JP3) to tie SDAIN to SDAOUT. JP3 must be in the TIE position when using the DC590B board to control the DC1366A board.

The DC590B board includes pull-up resistors on the SDA and SCL lines, while the DC1366A board has none. If the DC590B board is replaced by a different I²C master, the user must make sure there are appropriate pull-up resistors on SDA and SCL.

Interrupts

The LTC4266 includes an open-drain interrupt line for signaling the host controller when it needs service. This signal can be accessed on the DC1366A board at TP9. An LED is also included for convenience.

Connecting Multiple DC1366A Boards

To use multiple DC1366A boards on a common I²C bus, simply connect their J6 connectors together with ribbon cable (14-conductor, 1mm pitch).

Up to sixteen DC1366A boards can be controlled by a single I²C master. Remember to set each board to a different I²C address using the DIP switch.

The DC590B can't supply enough current on V_{DD} for more than five or six DC1366A boards; an external V_{DD} power supply is recommended if more than five DC1366A boards are connected together.

If a large number of DC1366A boards are connected to a single V_{EE} supply, be aware that banana patch cords are only rated for about 14A. To avoid exceeding the ampacity of the patch cords, the boards should be connected in a star configuration rather than connecting the boards in a chain.

GUI Software

The GUI application software is a powerful tool for learning the LTC4266 register set and developing power management protocols. See the *LTC4266 Demonstration Software Users Manual* for more details.

QUICK START GUIDE FOR DEMONSTRATION CIRCUIT 1366A

IEEE802.3AF/AT POWER-OVER-ETHERNET POWER SOURCING EQUIPMENT CONTROLLER

LTC4266

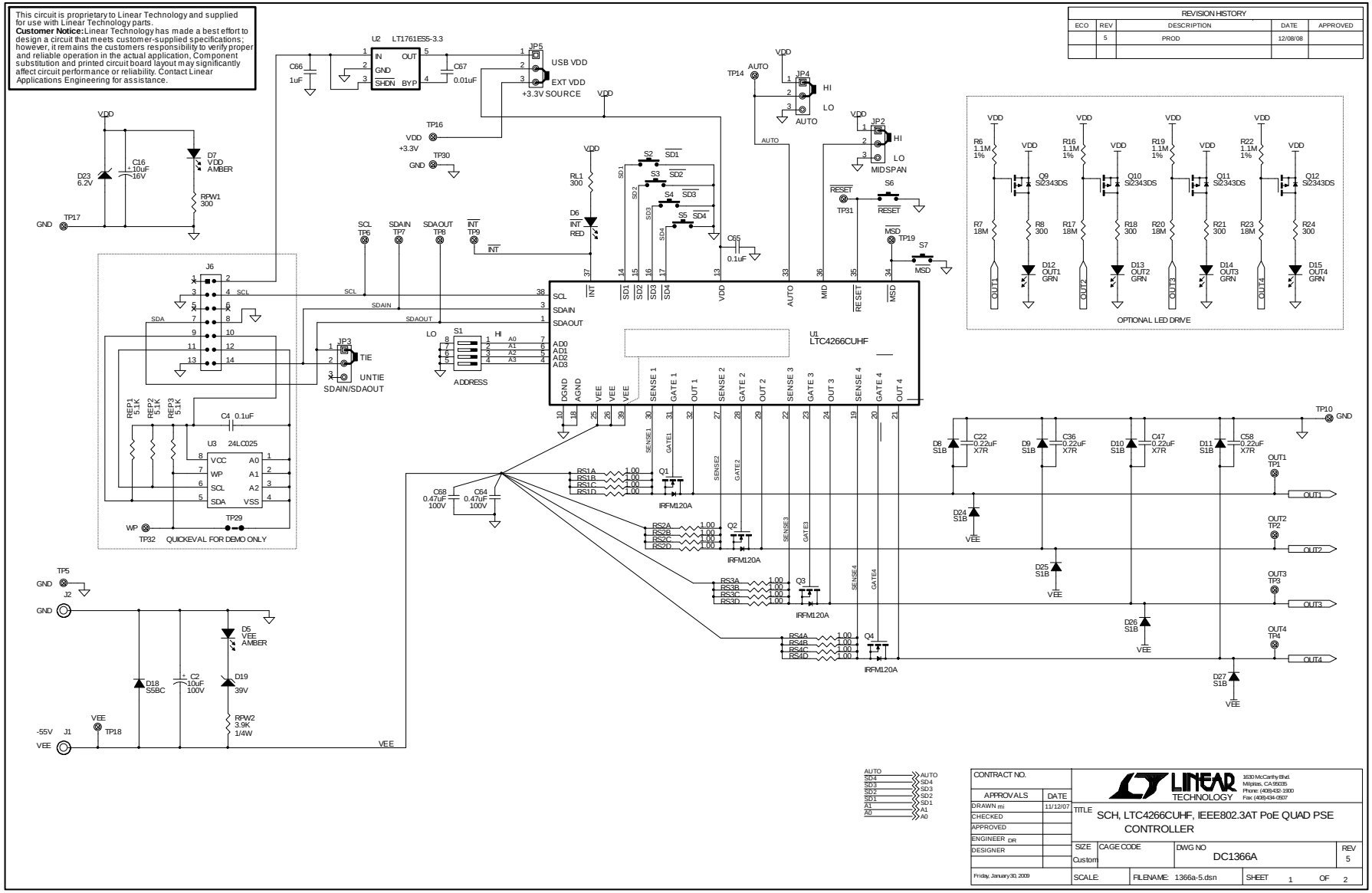

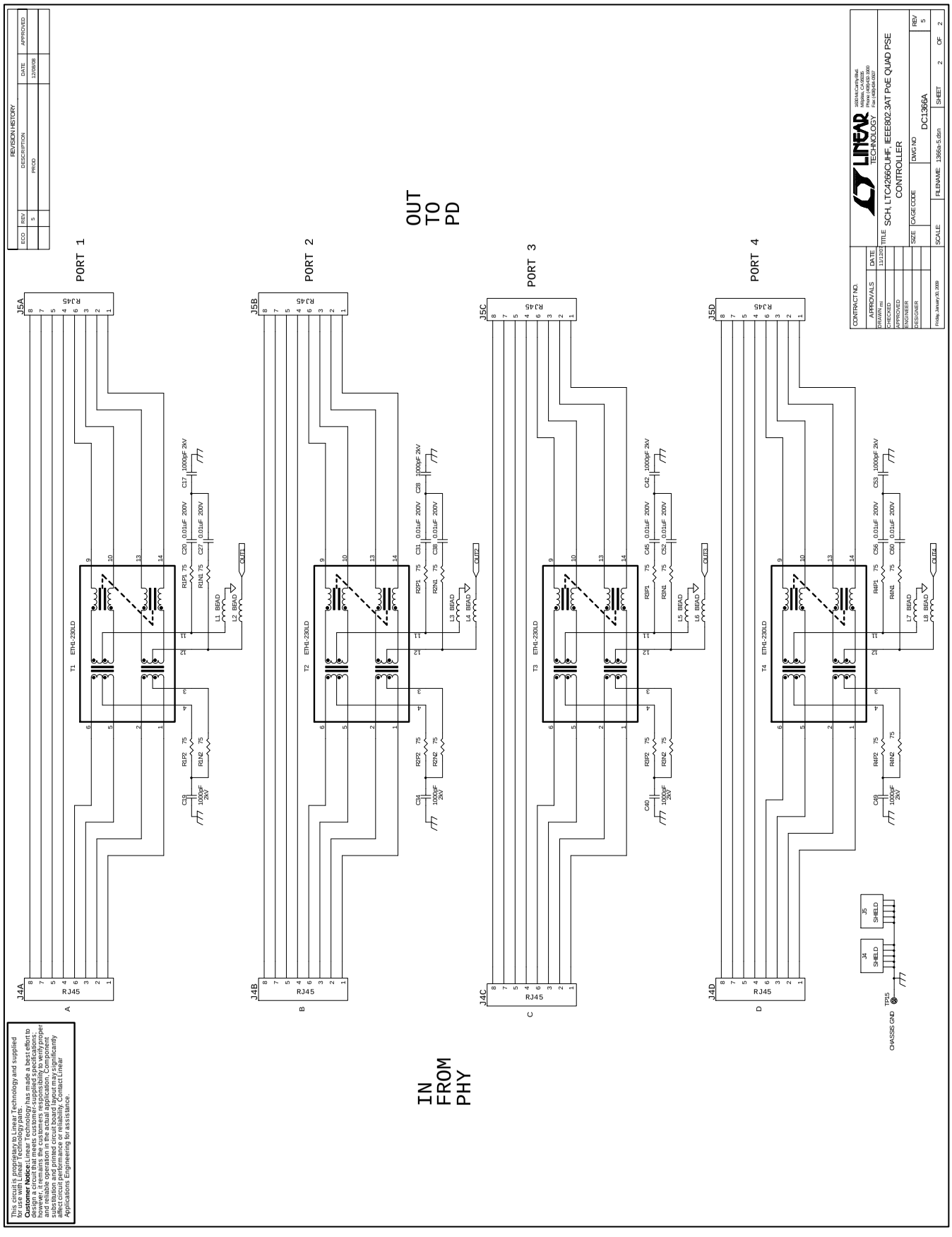

This circuit is proprietary to Linear Technology and supplied for use with Linear Technology parts.
Customer Notice: Linear Technology has made a best effort to design a circuit that meets customer-supplied specifications; however, it remains the customers responsibility to verify proper and reliable operation in the actual application. Component substitution and printed circuit board layout may significantly affect circuit performance or reliability. Contact Linear Applications Engineering for assistance.

ITEM	QTY	REF DES	DESCRIPTION	MFGR	MFGR PART NO.
1	1	C2	CAP, 10uF 20% 100V ALUM.	SANYO	100CV10BS
2	2	C65, C4	CAP, 0603 0.1uF 10% 25V X7R	TDK	C1608X7R1E104K
3	1	C16	CAP, 3528 10uF 20% 16V TANT	AVX	TAJB106M016
4	8	C17, C19, C28, C34, C40, C42, C49, C53	CAP, 1808 1000pF 20% 2KV X7R	TDK	C4520X7R3D102M
5	8	C20, C27, C31, C38, C45, C52, C56, C60	CAP, 0805 0.01uF 10% 200V X7R	MURATA	GRM21BR72E103KW03L
6	4	C22, C36, C47, C58	CAP, 1206 0.22uF 20% 100V X7R	AVX	12061C224MAT
7	2	C64, C68	CAP, 0805 0.47uF 10% 100V X7R	MURATA	GRM218R72A474KA73L
8	1	C66	CAP, 0603 1uF 10% 16V X7R	TDK	C1608X7R1C105K
9	1	C67	CAP, 0603 0.01uF 10% 25V X7R	AVX	06033C103KAT2A
10	2	D5, D7	LED, AMBER	PANASONIC	LN1451C-(TR)
11	1	D6	LED, RED	PANASONIC	LN1251-C-TR
12	8	D8-D11, D24-D27	DIODE, RECTIFIER, 100V 1A, SMB	VISHAY	S1B
13	4	D12, D13, D14, D15	LED, GREEN	PANASONIC	LN1351-C-TR
14	1	D18	DIODE, RECTIFIER 100V	DIODES INC.	S5BC
15	1	D19	DIODE, ZENER 39V	DIODES INC.	MMBZ5259B-7
16	1	D23	DIODE, ZENER, 6.2V	DIODES INC.	MMBZ5234B-7
17	4	JP2, JP3, JP4, JP5	HEADER, 3PIN, 2mm	SAMTEC	TMM-103-02-L-S
18	2	J2, J1	CONN, JACK, BANANA	KEYSTONE	575-4
19	2	J5, J4	CONNECTOR, RJ45, 4 PORTS	STEWART CONN INC	SS-718804S-A-NF
20	1	J6	HEADER, 2X7 2mm	MOLEX	87831-1420
21	0	J7	HEADER, 16 PIN 2mm	SAMTEC	TMM-108-02-L-D
22	8	L1, L2, L3, L4, L5, L6, L7, L8	FERRITE BEAD	STEWARD	MI1206K601R-10
23	4	Q1, Q2, Q3, Q4	XSTR, MOSFET, N-CHANNEL 100V	FAIRCHILD	IRFM120ATF
24	4	Q9, Q10, Q11, Q12	XSTR, MOSFET P-CHANNEL 30V	VISHAY	Si2343DS
25	3	REP1, REP2, REP3	RES, 0603 5.1K OHMS 5% 1/10W	VISHAY	CRCW06035K10JNEA
26	6	RPW1, RL1, R8, R18, R21, R24	RES, 0603 300 OHMS 5% 1/10W	VISHAY	CRCW0603300RJNEA
27	1	RPW2	RES, 1206 3.9K OHMS 5% 1/4W	VISHAY	CRCW12063K90JNEA
28	16	RS1D, RS1C, RS1B, RS1A, RS2D, RS2C, RS2B, RS2A, RS3D, RS3C, RS3B, RS3A, RS4D, RS4C, RS4B, RS4A	RES, 0603 1.00 OHMS 1% 1/10W	YAGEO	RC0603FR-071RL
29	0	RX1, RX2, RX3, RX4, RX5, RX6	RES, 0603 49.9 OHMS 1% 1/10W	VISHAY	CRCW060349R9FKEA
30	4	R6, R16, R19, R22	RES, 0603 1.1M OHMS 1% 1/10W	VISHAY	CRCW06031M10FKEA
31	4	R7, R17, R20, R23	RES, 0603 18M OHMS 5% 1/10W	KOA	RK73B1JTTD186J
32	16	R1P1, R1N1, R1P2,	RES, 0603 75 OHMS 5% 1/10W	VISHAY	CRCW060375R0JNEA
33	1	S1	SWITCH, DIP 4-POSITION	TYCO/ALCOSWITCH	ADE04
34	6	S2, S3, S4, S5, S6, S7	SWITCH, MOMENTARY	PANASONIC	EVQPJS05K

ITEM	QTY	REF DES	DESCRIPTION	MFGR	MFGR PART NO.
35	18	TP1-TP10, TP14-TP19,	TURRET	MILL MAX	2308-2-00-80-00-00-07-0
36	0	TP32	DO NOT STUFF	MILL MAX	2308-2-00-80-00-00-07-0
37	4	T1, T2, T3, T4	XFMR, POE+ ETHERNET	COILCRAFT	ETH1-230LD
38	1	U1	IC, LTC4266CUHF, QUAD PSE	LINEAR TECH	LTC4266CUHF
39	1	U2	IC, LDO MICROPOWER	LINEAR TECH	LT1761ES5-3.3
40	1	U3	IC, 24LC025, EEPROM	MICROCHIP	24LC025-1/ST
41	4	JP2, JP3, JP4, JP5	SHUNT, 2mm	SAMTEC	2SN-BK-G
42	4		STANDOFF, NYLON 12.7mm	KEYSTONE	8834