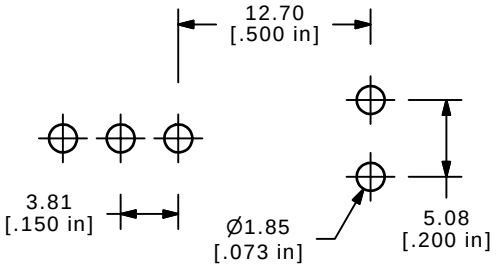

P.C. MOUNTING

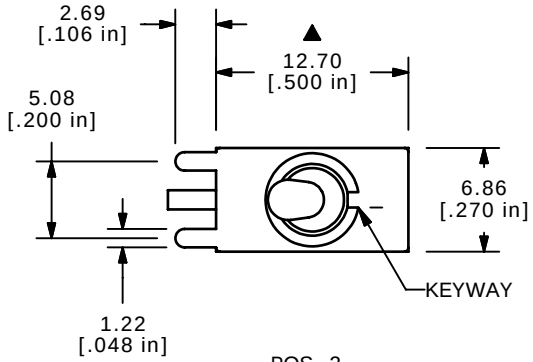

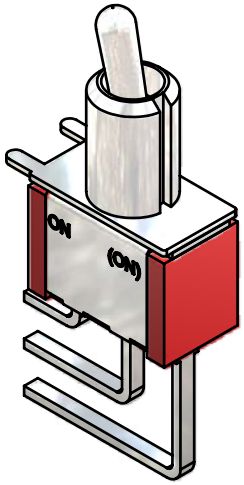

ISOMETRIC

▲ SWITCH FUNCTION		
POS. 1	POS. 2	POS. 3
ON	NONE	(ON)
2-3	N/A	2-1

(ON) = MOMENTARY

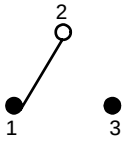

CIRCUIT: SPDT

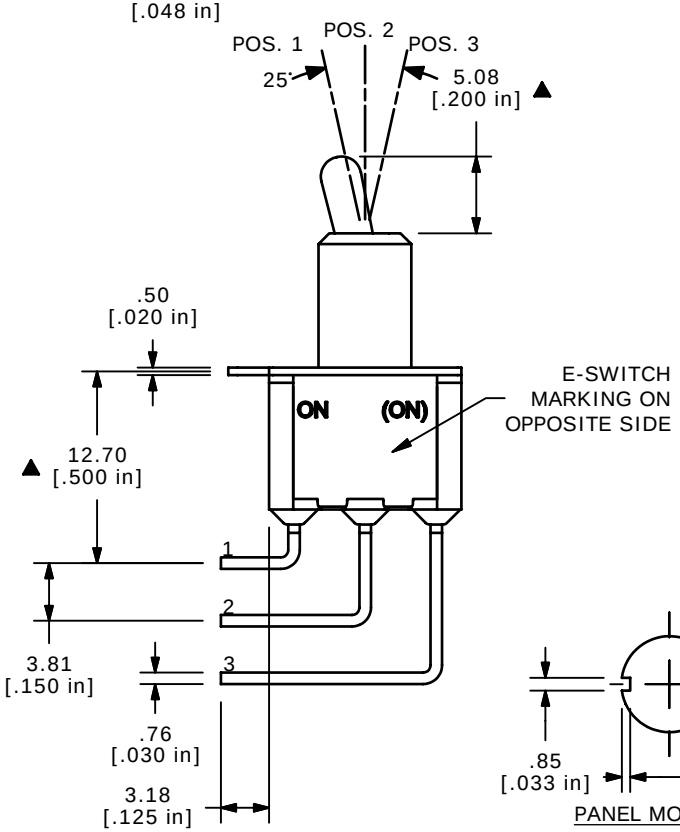

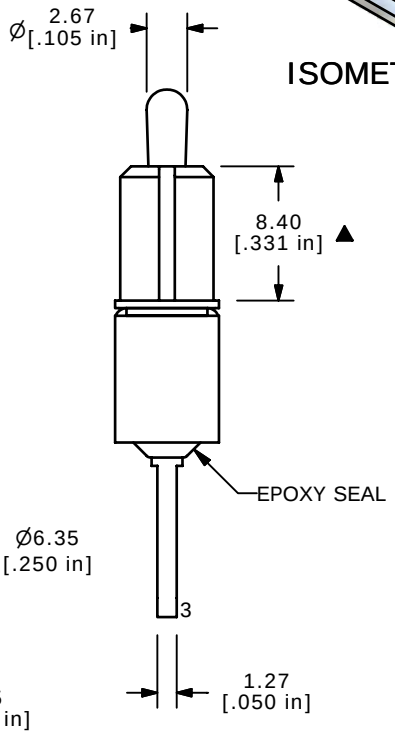

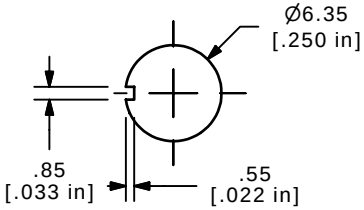

PANEL MOUNTING

NOTE:
1. ALL DIMENSIONS IN MM [INCH]
2. GENERAL TOLERANCE: X.X=±0.4
   X.XX=±0.25
3. TERMINAL NUMBERS FOR REF ONLY
▲4. PLATING MATERIAL: GOLD
5. RATING: 0.4VA MAX @ 20VAC OR DC MAX.
6. ELECTRIC LIFE: 40,000 MAKE-AND-BREAK CYCLES AT FULL LOAD.
7. INSULATION RESISTANCE: 1,000 MEGA-OHM MIN.
8. DIELECTRIC STRENGTH: 1,000 V RMS @SEA LEVEL.
9. OPERATING TEMP.: -30°C to 85°C
10. ▲DENOTES CRITICAL PARAMETER.
11. 2002/95/EC (ROHS) COMPLIANT.

REV	PCR NO	DESCRIPTION	DATE	BY
A	16929	RELEASED FOR PRODUCTION	1/29/07	TN

THE INFORMATION CONTAINED IN THIS DOCUMENT IS PROPRIETARY TO E-SWITCH AND IS NOT TO BE COPIED OR TRANSFERRED

E-SWITCH®

TITLE 100SP2T2B2M7RE

SCALE	DATE	DR	DWG	REV
2:1	1/29/2007	TN	T112029	A