THIS DRAWING IS UNPUBLISHED. RELEASED FOR PUBLICATION - ,- .
© COPYRIGHT - By - ALL RIGHTS RESERVED.

LOC	DIST
GP	00

REVISIONS

P	LTR	DESCRIPTION	DATE	DWN	APVD
	T1	REVISED PER ECO-11-004835	11MAR11	RK	HMR

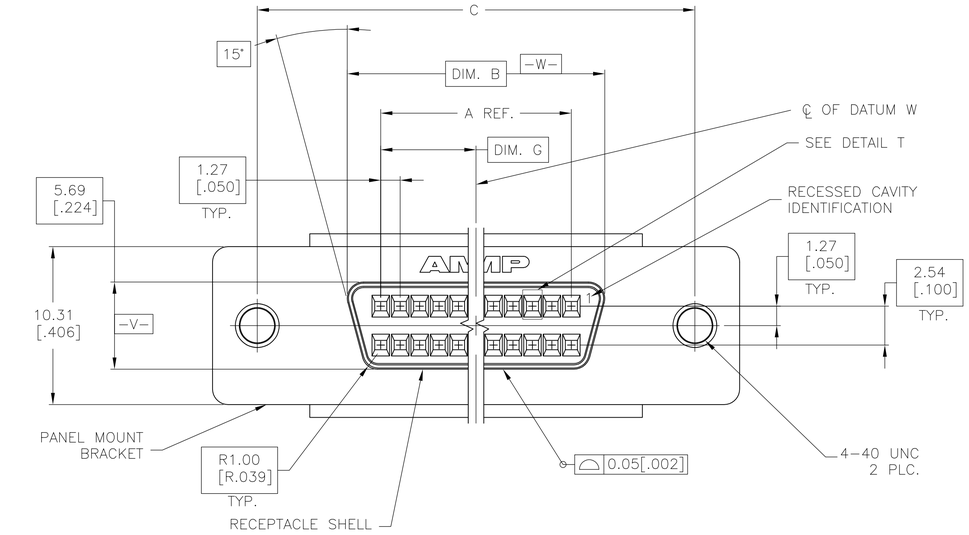

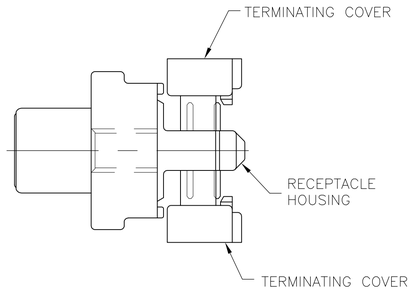

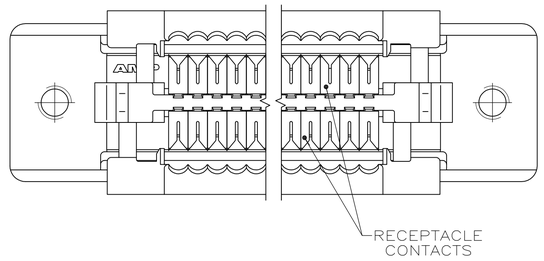

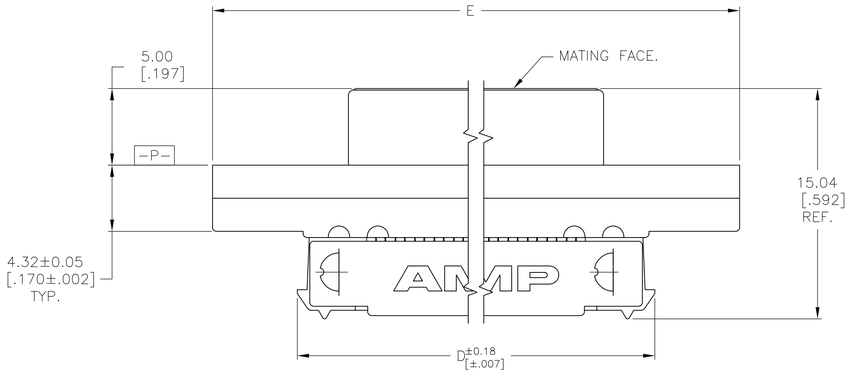

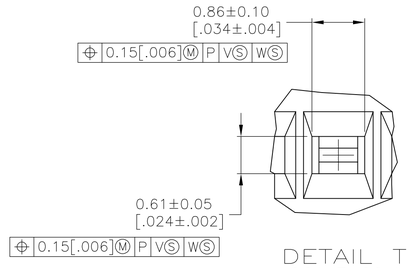

DETAIL T
SCALE 20:1
TYPICAL

1. MATERIAL–
RECEPTACLE CONTACTS: PHOSPHOR BRONZE.
RECEPTACLE SHELL: STEEL.
PANEL MOUNT BRACKET: ZINC.
RECEPTACLE HOUSING AND TERMINATION COVERS: UL V-0 RATED THERMOPLASTIC, COLOR: BLACK.

2. PLATING–
RECEPTACLE CONTACTS: EITHER 0.76μm [.000030] MIN GOLD PLATE OR GOLD FLASH OVER PALLADIUM NICKEL PLATE, 0.76μm [.000030] MIN TOTAL IN CONTACT AREA, 1.27μm [.000050] MIN TIN-LEAD IN TERMINATION AREA, ALL OVER 1.27μm [.000050] MIN NICKEL.
RECEPTACLE SHELL: 5.08μm [.000200] MIN NICKEL OVER 1.27μm [.000050] MIN COPPER.
PANEL MOUNT BRACKET: 5.08μm [.000200] MIN NICKEL OVER 7.62μm [.000300] MIN COPPER.

3. RECOMMENDED WIRE:
28 AWG OR 30 AWG, SOLID OR 7 STRANDED, PVC INSULATION WITH A 0.74-0.91 [.029-.036] INSULATION DIA.

4. OBSOLETE PART NUMBER.

5. PLATING–
RECEPTACLE CONTACTS: EITHER 0.76μm [.000030] MIN GOLD PLATE OR GOLD FLASH OVER PALLADIUM NICKEL PLATE, 0.76μm [.000030] MIN TOTAL IN CONTACT AREA, 1.27μm [.000050] MIN TIN IN TERMINATION AREA, ALL OVER 1.27μm [.000050] MIN NICKEL.
RECEPTACLE SHELL: 5.08μm [.000200] MIN NICKEL OVER 1.27μm [.000050] MIN COPPER.
PANEL MOUNT BRACKET: 5.08μm [.000200] MIN NICKEL OVER 7.62μm [.000300] MIN COPPER.

6. SUPERCEDED TO 5-749877-9

7. ROHS 2002/95/EC COMPLIANT

7	5	NO	31.12 [1.225]	84.20 [3.315]	73.13 [2.879]	78.23 [3.080]	66.45 [2.616]	62.23 [2.450]	100	5-749877-9
7	5	NO	20.96 [.825]	63.88 [2.515]	52.81 [2.079]	57.91 [2.280]	46.13 [1.816]	41.91 [1.650]	68	5-749877-7
7	5	NO	15.24 [.600]	52.45 [2.065]	41.38 [1.629]	46.48 [1.830]	34.70 [1.366]	30.48 [1.200]	50	5-749877-5
6	5	NO	31.12 [1.225]	84.20 [3.315]	73.13 [2.879]	78.23 [3.080]	66.45 [2.616]	62.23 [2.450]	100	1-749877-0
	2	NO	31.12 [1.225]	84.20 [3.315]	73.13 [2.879]	78.23 [3.080]	66.45 [2.616]	62.23 [2.450]	100	749877-9
	2	NO	20.96 [.825]	63.88 [2.515]	52.81 [2.079]	57.91 [2.280]	46.13 [1.816]	41.91 [1.650]	68	749877-7
	2	NO	15.24 [.600]	52.45 [2.065]	41.38 [1.629]	46.48 [1.830]	34.70 [1.366]	30.48 [1.200]	50	749877-5
4	2	NO	7.62 [.300]	37.21 [1.465]	26.14 [1.029]	31.24 [1.230]	19.46 [.766]	15.24 [.600]	26	749877-1
	FINISH	DATE CODE	G	E	D	C	B	A	NO. OF POSN.	PART NO

THIS DRAWING IS A CONTROLLED DOCUMENT.

DIMENSIONS: mm [INCHES]

TOLERANCES UNLESS OTHERWISE SPECIFIED:
0 PLC ± -
1 PLC ± -
2 PLC ± 0.13 [.005]
3 PLC ± -
4 PLC ± -
ANGLES ± -

MATERIAL 1

FINISH SEE TABLE

DWN M.MCCAFFREY 08/24/89
CHK J.BROSCHARD 09/05/89
APVD R WHITEMAN 10/24/89

PRODUCT SPEC 108-1228
APPLICATION SPEC 114-40029
WEIGHT -

TE Connectivity

NAME RECEPTACLE CABLE ASSEMBLY, FLAT TOP, PANEL MOUNT, AMPLIMITE .050 Series

SIZE	CAGE CODE	DRAWING NO	RESTRICTED TO
A1	00779	C-749877	-

CUSTOMER DRAWING | SCALE 5:1 | SHEET 1 OF 1 | REV T1

4805 (3/11)