PART NUMBER	REV	FIRST USED
1385638 – 1	E	122500 – 1
1385638 – 2	E	565435 – 5
1385638 – 3	E	354500 – 1

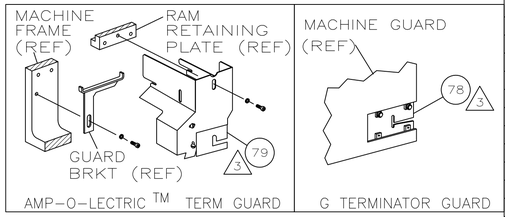

TERMINAL NAME: VERTICAL BULKHEAD CABLE RECPTACLE POWER CONTACT

1600960

AMP TERMINAL AMP CRIMP SPECS

PAD LTR	CRIMP HEIGHT	WIRE SIZE
A	.122 ±.002 [3.1 ±0.05mm]	8
B	.103 ±.002 [2.62 ±0.05mm]	10 or (2)14
C	NOT	USED
D	NOT	USED

CRIMP	SIZE	TYPE	RANGE
WIRE	.176 [4.47mm]	F	8–10
INSUL	.220 [5.59mm]	0	.176–.272

WIRE STRIP LENGTH	TERM APPL SPEC	FEED	APPL INSTRUCTION	SET UP GAGE	LAYOUT
.265–.295	NONE	.900	408–8040	458637–1	L2865

USED ON –

–1	LEADMAKER	AIRFEED
–2	BENCH MODEL K	AIRFEED
–3	BENCH MODEL G	AIRFEED

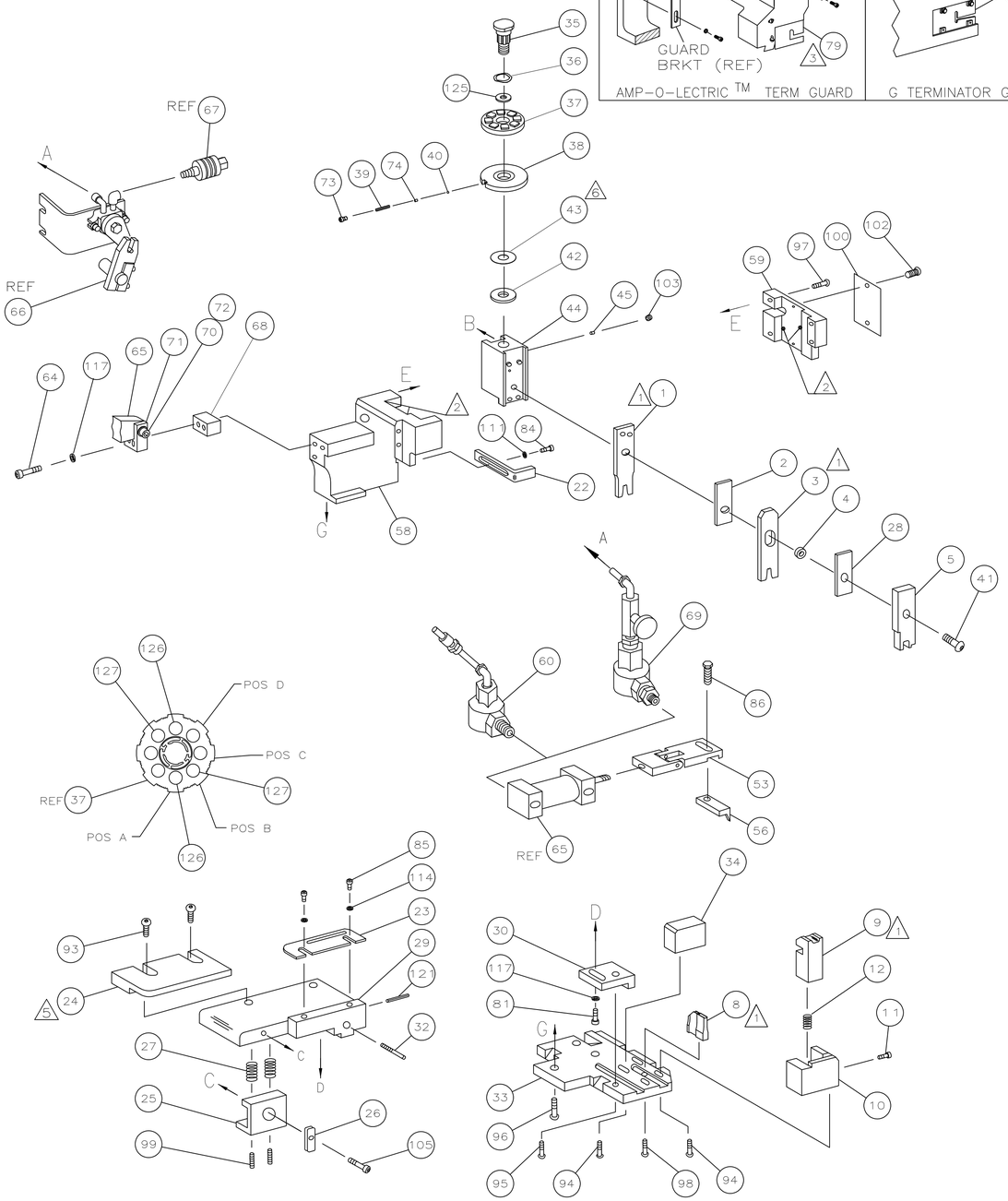

–3	–2	–1	U/M	PART NO	DESCRIPTION	ITEM NO
						129
						128
2	2	2	–	4–354778–7	PIN, WIRE DISC (.2730)B	127
2	2	2	–	354778–9	PIN, WIRE DISC (.2540)A	126
1	1	1	–	986950–1	WASHER, FLAT PRECISION	125
1	1	1	–	217238–1	GENERAL INSTRUCTION PACKAGE	124
1	1	1	–	4088040	SF APPL INST 408–8040	123
						122
1	1	1	–	4–21028–0	PIN,SLT SPR(Ø.093x.75)ST GDE PL	121
						120
						119
						118
3	3	3	–	21024–5	WASHER, LOCK(#10)ADJ BLOCK	117
						116
						115
2	2	2	–	21024–2	WASHER,LOCK(#4)FRONT STP GUIDE	114
						113
						112
1	1	1	–	21024–4	WASHER,LOCK(#8)STRIPPER	111
						110
						109
						108
						107
						106
1	1	1	–	22353–8	SCR,SHLD(Ø.187x.25)DRAG LEVER	105
						104
1	1	1	–	21009–2	SCR,SKT SET(1/4–20x.25 LW)RAM	103
2	2	2	–	21017–2	SCR,DRIVE(#2x.19)ID PLATE	102
						101
1	1	1	–	461264–1	PLATE, IDENTIFICATION	100
2	2	2	–	5–21006–6	SCR,SET(10–32x.75)DRAG	99
1	1	1	–	22733–8	SCR,BHC(8–32x.38 LW)ANVIL	98
4	4	4	–	2–21002–9	SCR,BHC(10–32x.75)CAP	97
3	3	3	–	2–22733–8	SCR,BHC(1/4–20x.62)HSG	96
1	1	1	–	2–21002–7	SCR,BHC(10–32x.50)SG ADJ BLK	95
4	4	4	–	2–21002–2	SCR,BHC(8–32x.50)TERM H DWN	94
2	2	2	–	2–21002–4	SCR,BHC(8–32x.75)R STP GDE	93
						92
						91
						90
						89
						88
						87
1	1	1	–	2–21002–0	SCR,BHC(8–32x.25)FEED FINGER	86
2	2	2	–	1–21000–3	SCR,SHC(4–40x.25)FR ST GUIDE	85
1	1	1	–	2–21000–7	SCR,SHC(8–32x.50)STRIPPER	84
						83
						82
1	1	1	–	3–21000–4	SCR,SHC(10–32x.38)SG ADJ BL	81
						80
–	1	–	–	462992–7	GUARD ASSY	79
REF	–	–	–	679532–1	INSERT, GUARD	78
						77
						76
						75
1	1	1	–	690603–1	SPRING, ASSIST	74
1	1	1	–	23030–1	SCR,SHC(6–32x.25 SL)INS DISC	73
1	1	1	–	3–21001–4	SCR,SHC(3/8x.88)FEED MT	72
1	1	1	–	459610–3	MOUNT, FEED BRACKET	71

QTY REQD PER ASSY — PARTS LIST

–3	–2	–1	U/M	PART NO	DESCRIPTION	ITEM NO
1	1	1	–	21024–8	WASHER,LOCK(3/8)FEED BRKT	70
–	1	–	–	692655–5	AIR FEED VALVE ASSY	69
1	1	1	–	461690–1	SPACER, AIR FEED	68
–	REF	–	–	24042–2	VALVE, SHUT OFF	67
–	REF	–	–	692655–6	AIR FEED VALVE ASSY	66
1	1	1	–	461065–2	AIR FEED ASSY (2 INCH)	65
2	2	2	–	4–21000–3	SCR,SHC(10–32x2.00)AIR ASSY	64
						63
						62
						61
1	–	1	–	692655–7	AIR FEED VALVE ASSY	60
1	1	1	–	454220–1	CAP, RAM	59
1	1	1	–	454485–1	HOUSING	58
						57
1	1	1	–	2–694433–1	PAWL, FEED	56
						55
						54
1	1	1	–	461062–1	FEED FINGER ASSY	53
						52
						51
						50
						49
						48
						47
						46
1	1	1	–	690191–1	PLUG, NYLON	45
1	1	1	–	1–819307–0	RAM	44
1	1	1	–	690125–1	WASHER, LAMINATED	43
1	1	1	–	690124–6	WASHER, RAM	42
1	1	1	–	7–21002–9	BOLT, CRIMPER(5/16x1.00)	41
1	1	1	–	23241–6	BALL, STEEL	40
1	1	1	–	690170–1	SPRING, COMPRESSION	39
1	1	1	–	1–690142–1	DISC, INSULATION	38
1	1	1	–	354777–1	WIRE DISC, PLASTIC	37
1	1	1	–	22480–5	WASHER, SPRING	36
1	1	1	–	690212–1	POST, RAM	35
1	1	1	–	690786–1	SUPPORT, TERMINAL	34
1	1	1	–	455675–1	PLATE, BASE	33
1	1	1	–	690432–3	SCREW, ADJUSTMENT	32
						31
1	1	1	–	455689–1	BLOCK, STRIP GUIDE ADJ	30
1	1	1	–	458144–1	PLATE, STRIP GUIDE	29
1	1	1	–	1–455888–6	SPACER, FRONT SHEAR DEP	28
2	2	2	–	1–22284–0	SPRING, DRAG	27
1	1	1	–	356835–1	LEVER, DRAG RELEASE	26
1	1	1	–	240792–1	DRAG, TERMINAL	25
1	1	1	–	4–90765–2	GUIDE, STRIP (REAR)	24
1	1	1	–	1–690438–0	GUIDE, STRIP (FRONT)	23
1	1	1	–	458230–4	STRIPPER	22
						21
						20
						19
						18
						17
						16
						15
						14
						13
1	1	1	–	3–22280–3	SPRING, SHEAR	12
1	1	1	–	690461–2	STOP, SHEAR	11
1	1	1	–	2–690459–3	HOLDER, SHEAR (FRONT)	10
1	1	1	–	2–454276–4	SHEAR, FLOAT (FRONT)	9
1	1	1	–	7–662520–8	ANVIL	8
						7
						6
1	1	1	–	3–455889–9	DEPRESSOR, SHEAR (FRONT)	5
1	1	1	–	238011–1	SPACER, BLOCK CRIMPER	4
1	1	1	–	3–456135–4	CRIMPER, INSULATION	3
1	1	1	–	1–455888–0	SPACER, CRIMPER	2
1	1	1	–	4–1490019–3	CRIMPER, WIRE	1

PARTS LIST

1. RECOMMENDED SPARE PARTS.
2. GREASE LIGHTLY.
3. GUARD MUST BE IN PLACE WHEN OPERATING APPLICATOR IN A BENCH MACHINE.
4. SEE DRAWING FOR COMPONENTS
5. REAR STRIP GUIDE TO GUIDE ON INSULATION BARREL.
6. TRIM TO FIT ITEM 43 TO OUTSIDE DIAMETER OF ITEM 42 DURING ASSEMBLY.
7. AMP 3K/5K TERMINATORS REQUIRE AN OVERSIZED GUARD KIT, P/N 1976900–1.

P	LTR	REVISION RECORD	DATE	DWN	APVD
	E1	ECR–12–005668	3–2012	MY	GB

DIMENSIONS: INCHES

TOLERANCES UNLESS OTHERWISE SPECIFIED:
0 PLC ± –
1 PLC ± –
2 PLC ± .25
3 PLC ± –
4 PLC ± –
ANGLES ± –
SURFACE TEXTURE –√

DWN R. KNEPPER 31JUL03	MATERIAL – –	HEAT TREAT – –
CHK G.BAILEY 20OCT03	Tyco Electronics	Tyco Electronics Corporation Harrisburg, PA 17105–3608
APVD T.ELBIN 31JUL03		
NAME SIDE FEED HDM APPLICATOR		
SCALE –	SIZE A1	DRAWING NO 1385638
SHEET 1 OF 1	REV E1	

CUSTOMER ACCESSIBLE PRODUCTION DRAWING

DIMENSIONING AND TOLERANCING PER ASME Y14.5M (ISO STANDARDS)
THIS DRAWING IS A CONTROLLED DOCUMENT.

DWG NO 1385638

THIS INFORMATION IS CONFIDENTIAL AND PROPRIETARY TO TYCO ELECTRONICS CORPORATION AND ITS WORLDWIDE SUBSIDIARIES AND AFFILIATES. IT MAY NOT BE DISCLOSED TO ANYONE EXCEPT TYCO ELECTRONICS PERSONNEL WITHOUT WRITTEN AUTHORIZATION FROM TYCO ELECTRONICS CORPORATION, HARRISBURG, PENNSYLVANIA USA.

LOC A
DIST 66
3308–8 (1/08)